Fig 43 Batten roll with 45degrees fillet at vertical upstand

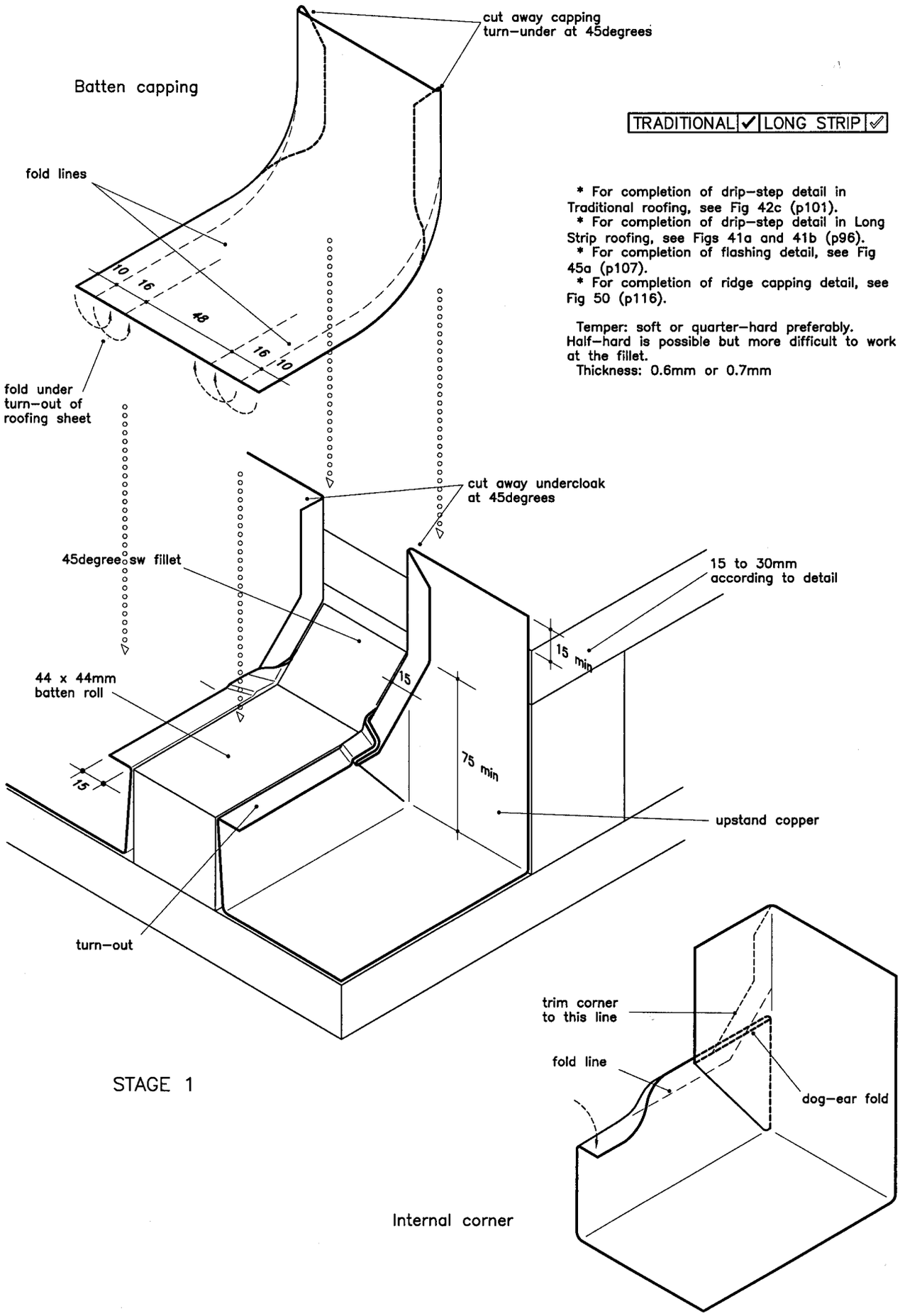

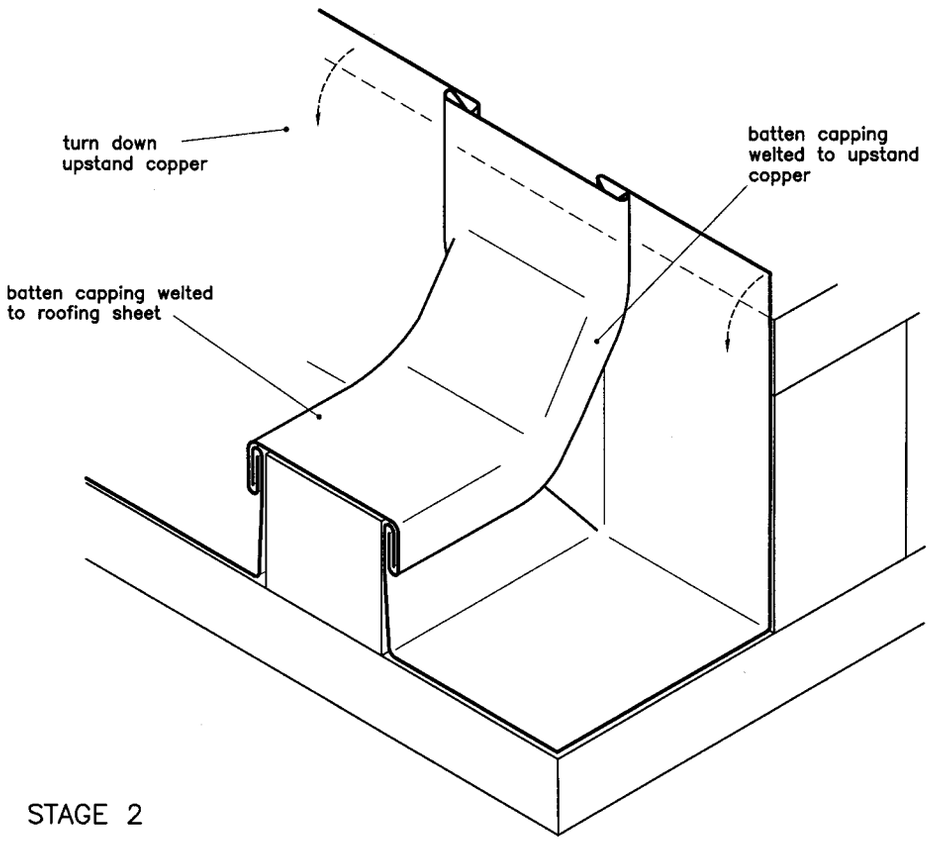
turn down
upstand copper
batten capping
welted to upstand
copper
batten capping welted
to roofing sheet
STAGE 2

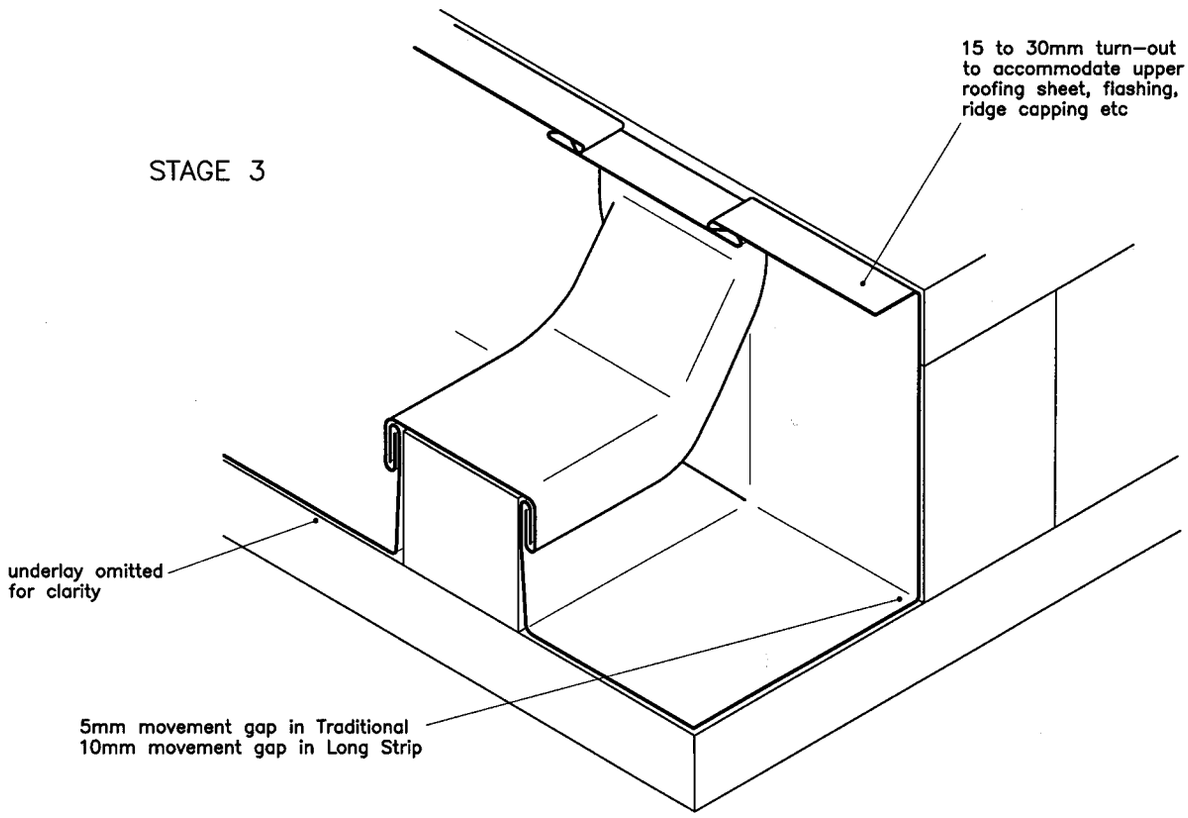
15 to 30mm turn–out
to accommodate upper
roofing sheet, flashing,
ridge capping etc
STAGE 3
underlay omitted
for clarity
5mm movement gap in Traditional
10mm movement gap in Long Strip